Instruction 51-1143
5-1-06

Copyright© 2003, 2006
by S&S Cycle, Inc.

All rights reserved.
Printed in the U.S.A.

S&S® Cycle, Inc.
235 Causeway Blvd.
La Crosse, Wisconsin 54603
Phone: 608-627-1497 • Fax: 608-627-1488
Technical Service Phone: 608-627-TECH (8324)
Technical Service Email: sstech@sscycle.com
Website: www.sscycle.com

Because every industry has a leader

Installation Instructions: S&S® Breather Valve for 1999-2006 Big Twin Engines

(Patents Pending)

DISCLAIMER:

S&S parts are designed for high performance, off road, racing applications and are intended for the very experienced rider only. The installation of S&S parts may void or adversely effect your factory warranty. In addition such installation and use may violate certain federal, state, and local laws, rules and ordinances as well as other laws when used on motor vehicles used on public highways, especially in states where pollution laws may apply. Always check federal, state, and local laws before modifying your motorcycle. It is the sole and exclusive responsibility of the user to determine the suitability of the product for his or her use, and the user shall assume all legal, personal injury risk and liability and all other obligations, duties, and risks associated therewith.

The words Harley®, Harley-Davidson®, H-D®, Sportster®, Evolution®, and all H-D part numbers and model designations are used in reference only. S&S Cycle is not associated with Harley-Davidson, Inc.

SAFE INSTALLATION AND OPERATION RULES:

Before installing your new S&S part it is your responsibility to read and follow the installation and maintenance procedures in these instructions and follow the basic rules below for your personal safety.

● Gasoline is extremely flammable and explosive under certain conditions and toxic when inhaled. Do not smoke. Perform installation in a well ventilated area away from open flames or sparks.

● If motorcycle has been running, wait until engine and exhaust pipes have cooled down to avoid getting burned before performing any installation steps.

● Before performing any installation steps disconnect battery to eliminate potential sparks and inadvertent engagement of starter while working on electrical components.

● Read instructions thoroughly and carefully so all procedures are completely understood before performing any installation steps. Contact S&S with any questions you may have if any steps are unclear or any abnormalities occur during installation or operation of motorcycle with a S&S part on it.

● Consult an appropriate service manual for your motorcycle for correct disassembly and reassembly procedures for any parts that need to be removed to facilitate installation.

● Use good judgement when performing installation and operating motorcycle. Good judgement begins with a clear head. Don't let alcohol, drugs or fatigue impair your judgement. Start installation when you are fresh.

● Be sure all federal, state and local laws are obeyed with the installation.

● For optimum performance and safety and to minimize potential damage to carb or other components, use all mounting hardware that is provided and follow all installation instructions.

● Motorcycle exhaust fumes are toxic and poisonous and must not be inhaled. Run motorcycle in a well ventilated area where fumes can dissipate.

IMPORTANT NOTICE:

Statements in this instruction sheet preceded by the following words are of special significance.

⚠ WARNING

Means there is the possibility of injury to yourself or others.

⚠ CAUTION

Means there is the possibility of damage to the part or motorcycle.

NOTE

Other information of particular importance has been placed in italic type.

S&S recommends you take special notice of these items.

WARRANTY:

All S&S parts are guaranteed to the original purchaser to be free of manufacturing defects in materials and workmanship for a period of twelve (12) months from the date of purchase. Merchandise that fails to conform to these conditions will be repaired or replaced at S&S's option if the parts are returned to us by the purchaser within the 12 month warranty period or within 10 days thereafter.

In the event warranty service is required, the original purchaser must call or write S&S immediately with the problem. Some problems can be rectified by a telephone call and need no further course of action.

A part that is suspect of being defective must not be replaced by a Dealer without prior authorization from S&S. If it is deemed necessary for S&S to make an evaluation to determine whether the part was defective, a return authorization number must be obtained from S&S. The parts must be packaged properly so as to not cause further damage and be returned prepaid to S&S with a copy of the original invoice of purchase and a detailed letter outlining the nature of the problem, how the part was used and the circumstances at the time of failure. If after an evaluation has been made by S&S and the part was found to be defective, repair, replacement or refund will be granted.

ADDITIONAL WARRANTY PROVISIONS:

(1) S&S shall have no obligation in the event an S&S part is modified by any other person or organization.

(2) S&S shall have no obligation if an S&S part becomes defective in whole or in part as a result of improper installation, improper maintenance, improper use, abnormal operation, or any other misuse or mistreatment of the S&S part.

(3) S&S shall not be liable for any consequential or incidental damages resulting from the failure of an S&S part, the breach of any warranties, the failure to deliver, delay in delivery, delivery in non-conforming condition, or for any other breach of contract or duty between S&S and a customer.

(4) S&S parts are designed exclusively for use in Harley-Davidson® and other American v-twin motorcycles. S&S shall have no warranty or liability obligation if an S&S part is used in any other application.

INTRODUCTION
The S&S® Breather Valve assembly is designed to eliminate oil carry over in 1999-2006 Harley Davidson® Twin-Cam 88® engines. It fits "A" (non-counterbalanced) engines.

The Crankcase Breather Valve for 1999-2006 engines was designed and developed for use with stock Harley-Davidson® oil pumps and tappets, and may not be compatible with some aftermarket components.

It is necessary to remove and re-install the camshaft assembly to install the Breather Valve Assembly. This installation requires specialized tools and knowledge, and should be performed by an experienced mechanic with access to a Harley Davidson® service manual and all required tools.

Part 31-2070 — Fits 1999-2002 Twin Cam 88® "A" engines.
Part 31-2071 — Fits 2003-2006 Twin Cam 88® "A" engines.

KIT CONTENTS
One pre-assembled Breather Valve Assembly and wave spring.

A. Installation instructions

1. Disconnect negative terminal of battery to eliminate potential sparks and inadvertent engagement of starter while working on motorcycle.
2. Remove cam cover, camshaft assemblies, cam support plate and oil pump per appropriate Harley-Davidson® service manual instructions.
3. Breather Valve Assembly installs by hand into the crankcase pinion bearing bore. **See Picture 1.**



Picture 1

NOTE: *Some OEM engine cases have a sharp edge at the top of the bearing bore. Item #4 O-ring must compress past the top edge of the pinion bearing bore during installation. If the top edge of the pinion bearing bore is sharp enough to damage the O-ring, carefully break the edge with a suitable de-burring tool to prevent damage to the O-ring when the Breather Valve Assembly is installed. Do not allow any material removed during the de-burring operation to remain in the engine.*

4. Lubricate item #4 O-ring, and item #2 seal, with assembly lube before installing.

NOTE: *The Breather Valve Assembly may be installed rotated to any position.*

5. Position Breather Valve Assembly on pinion shaft, with item #4 O-ring at top edge of crankcase bearing bore. Carefully push the Breather Valve Assembly by hand into the bore until the back of the Breather Valve housing seats on the pinion bearing outer race. The O-ring may be rocked slightly to aid starting it into the bore. Use care not to damage the O-ring, or unseat it from its groove when pressing it into place.
6. Position item #1 wave spring in counterbore of Breather Valve Assembly. Wave spring can be installed with either side up. Apply a sufficient amount of wheel bearing grease to hold wave spring in position during oil pump and cam plate installation. Breather Valve Assembly is held in place by the wave spring, which is compressed between the Breather Valve Assembly and the oil pump body. **See Picture 2.**

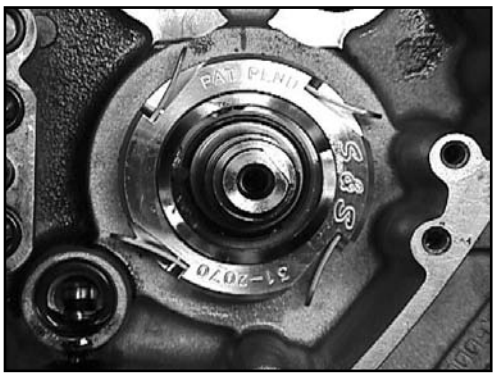

Picture 2

⚠ CAUTION

Be sure #1 wave spring stays in position during engine reassembly. There will be some resistance when reinstalling cam plate from compressing the wave spring between the Breather Valve Assembly and the back of the oil pump. If cam plate will not seat into place, wave spring may have shifted out of position. Do not force parts.

7. Re-assemble oil pump, cam plate, camshaft assemblies, and cam cover per appropriate Harley-Davidson® Service Manual instructions.

B. Service Instructions and Replacement Parts.

NOTE: *The S&S® Breather Valve does not require periodic maintenance. Flappers should only be replaced in sets of four.*

1. Torque value for item #7 screw: 6-8 inch lbs.
2. Use purple Loctite® #222.
3. Replacement seal can be installed using a 1¼" socket as a driver. The seal must be installed with the sealing lip positioned as in **Picture 3.** Press in seal until it seats in bottom of bore.

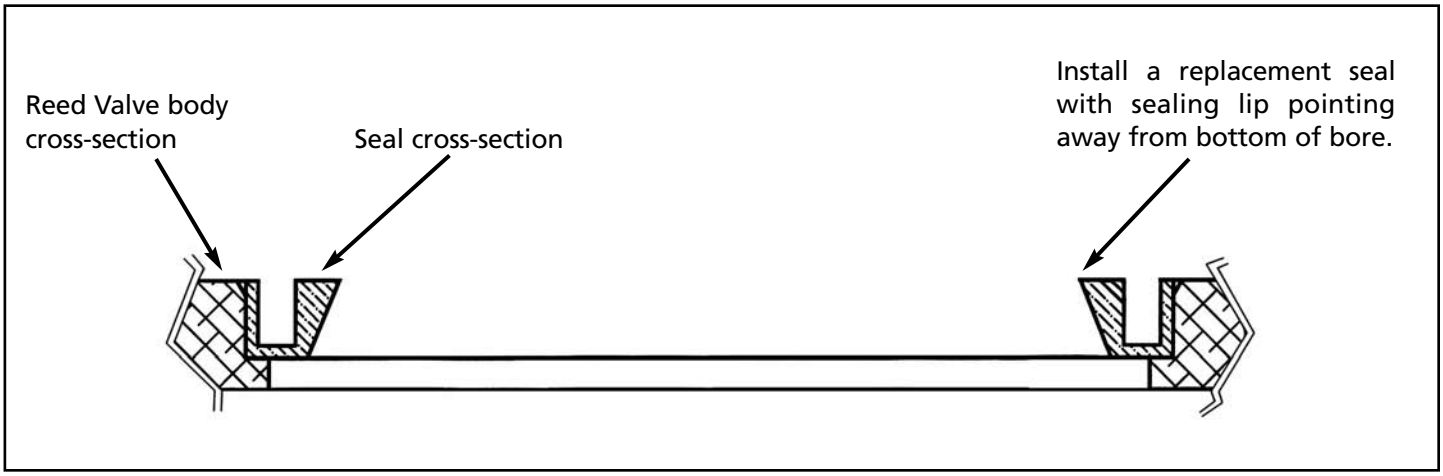

Picture 3

Replacement Parts for S&S Breather Valve

NOTE: *Parts fit both models except as noted.**

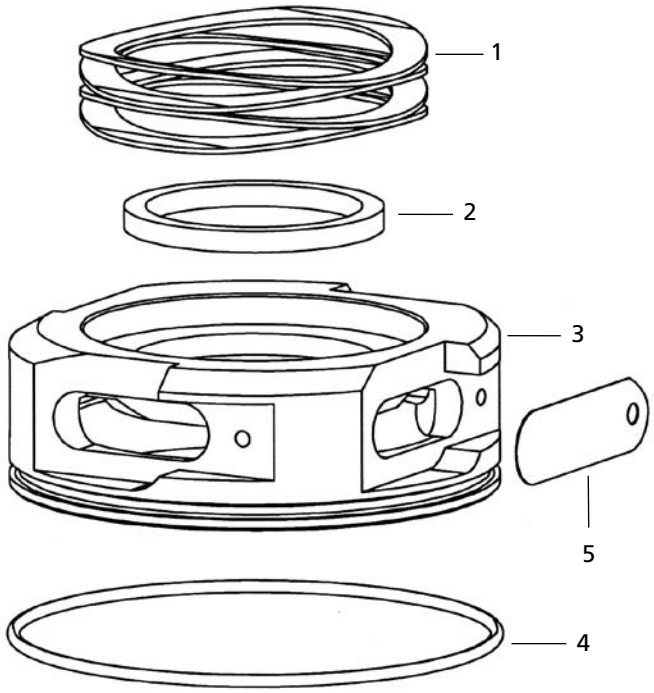

1. Wave spring **50-8404**

2. Seal **31-4086**

3. Body .....**N/A**

4. O-ring

*Fits 31-2070 (5 Pack).....**50-8154**
*Fits 31-2071 (5 Pack).....**50-8155**

5. Flapper (4 Pack) **31-2072**

6. Stop **31-2075**

7. Screw (10 Pack).....**50-0305**



Because every industry has a leader