DYNATEK

USER INSTRUCTIONS
FOR PART NOS.

DD2000-HD2E
DD2000-HD2E8

Programmable Digital Ignition System
For
Harley-Davidson Motorcycles

DESCRIPTION

The DYNA 2000 Digital Ignition system for Harley-Davidson motorcycles is a plug in upgrade to the electronic advance ignition found on late model Harleys. This ignition is microcomputer controlled, generating extremely accurate control over the entire ignition process. The DYNA 2000 is without question the most sophisticated and capable aftermarket ignition available for Harley-Davidsons.

In addition to providing precise control over the ignition process, the DYNA 2000 allows you to tailor the advance curve and rev limiter to the specific needs of your particular engine. The DYNA 2000 has eight built in advance curves which have been optimized to cover the needs of stock motors to highly modified motors over a variety of operating conditions. There are also four independent rev limiter choices from 6000 to 7500 RPM, allowing you to set the exact protection level you need.

The DYNA 2000 is triggered directly from the stock Hall effect pickup found on the camshaft of all late model Harleys. Earlier model bikes without factory electronic ignition can also use the DYNA 2000 by installing a pickup from any late model bike.

A diagnostic LED indicator is included on the back of the ignition module to assist in trouble shooting and static timing.

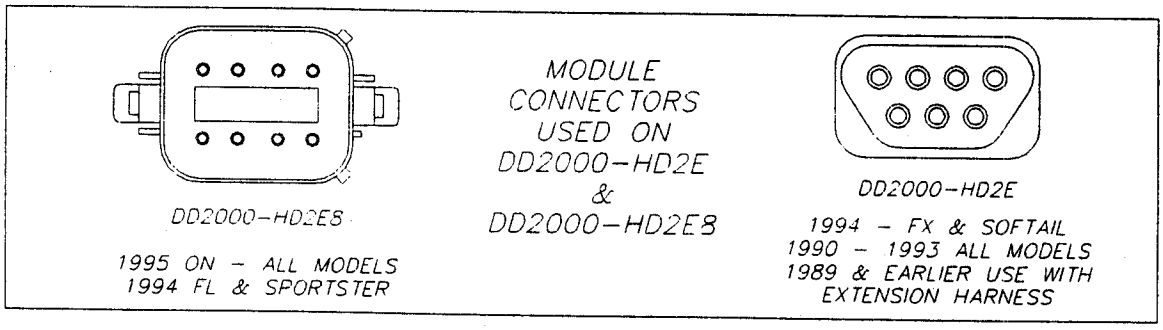

164 S. VALENCIA ST. • GLENDORA, CA 91741 • (626) 963-1669 • FAX (626) 963-7399

INSTALLATION NOTES

IMPORTANT On any electronic advance ignition such as the DYNA 2000 or the stock Harley ignition, you must use carbon or graphite core type suppression spark plug wires with a resistance in the range of 2000 to 4000 ohms per foot to reduce radio frequency interference. Use of spiral core type suppression wires or metal core wires may cause malfunction of the ignition due to severe electrical noise generated at the spark plugs. The original wires supplied by Harley-Davidson are acceptable. Suppression wires are also available from DYNATEK.

If you have a bike that does not have an ignition harness that can be unplugged from the ignition module (Pre 1990), use DYNATEK Part No. 1009001 DYNA 2000-HD extension harness and module DD2000-HD2E to complete the ignition wiring.

**IMPORTANT ** - The stock pickup assembly consists of two pieces, a sensor plate and a rotating cup attached to the camshaft. The rotating cup used on 1983 and later Harleys has part number 32402-83 stamped on it and is gold in color. This is the correct cup to use with the DYNA 2000. Pre 1983 electronic ignition bikes have a silver colored cup with different window widths. The DYNA 2000 advance curves will not work properly with the old cup design. If you have one of these older cups, get a newer cup with the above part number from your Harley dealer.

Any of the sensor plates produced from 1983 on will work with the DYNA 2000. Bikes originally equipped with points (except distributors) or early electronic ignition (Prestolite) will accept the later model sensor and cup without modification. Sensor plate number 32400-80A is typical.

INSTALLATION

Recommended Coil: Use one dual output coil with a primary resistance of 2.8 to 3.5 ohms, such as DYNATEK Part No. DC6-1, or stock Harley coil, or Screamin' Eagle Harley coil. For dual plug applications, 2 DC2-1 or DC5-1 coils wired in **series** can be used.

1. Locate the stock ignition module and unbolt it from the bike.

2. If the stock module has a connector, unplug it. If there is no main harness plug on your module you will need an extension harness for the DYNA 2000. If you are installing an extension harness, follow the wiring instructions included with the new harness.

3. Plug the DYNA 2000 into the connector on the harness. Don't bolt down the DYNA 2000 yet. Your system is now completely wired. After configuring the mode switches and checking the timing, you will be ready to run.

V.O.E.S. Switch

All late model Harley-Davidson engines incorporate a Vacuum Operated Electric Switch (VOES) in the intake manifold. This switch is connected to the ignition system through the purple wire. The purpose of this switch is to sense high manifold vacuum conditions during part throttle operation. When the manifold vacuum is high, the VOES switch grounds the purple wire and jams the stock ignition module to full advance regardless of what the engine RPM is . As it turns out, the VOES switch is almost always closed, causing the stock ignition to be at full advance nearly all the time except under wide open throttle conditions.

The DYNA 2000 module uses the VOES in a slightly different manner. When the VOES is active (grounded), the DYNA 2000 module follows a "quick" advance curve that reaches full advance by 1500 rpm. The total advance generated by the DYNA 2000 is determined by which curve you select. Using this advance scheme, the DYNA 2000 always provides a smooth continuous advance curve function that is optimized for both part and full throttle operation. The actual advance curves are shown at the end of these instructions.

CONFIGURING THE MODE SWITCHES

There are 5 mode switches located on the back of the DYNA 2000 ignition module. These switches allow you to custom configure your DYNA 2000 to match the requirements of your bike. Go through the following list of switch functions and make sure each switch is in the proper position before you start the motor.

Switch 1	V.O.E.S.	Description
OFF	NORMAL	In this mode, during part throttle operation, when the manifold vacuum is high as sensed by the V.O.E.S. switch, the advance is brought in to it's final value by 1500 rpm. This improves part throttle driveability. Most bikes should be set to this mode.
ON	RETARD	In this mode, the V.O.E.S. wire acts as a retard input. This mode should only be used in special applications such as with nitrous oxide or turbo kits. This mode is explained further at the end of these instructions

CHOOSING AN ADVANCE CURVE

Which advance curve is most appropriate for your engine will depend on several factors. These may include: level of modification of the engine, weight of bike and rider, type of gasoline used, air temperature, altitude, etc. A good procedure would be to start with curve 2 which is similar to the curve used in the stock ignition module. If you experience any "pinging", try curve 3 then curve 4 if necessary to get rid of the pinging. If your bike runs well on curve 2, try curve 1 after several miles and find out if your motor likes curve 1 better than curve 2.

Generally, you should run the lowest number curve (most aggressive) that you can without causing any pinging. The actual curves are shown at the end of these instructions to satisfy the curious.

Switch 2	Switch 3	Advance Curve	Description
OFF	OFF	Curve 1 -	This curves brings up the advance the earliest and to the highest final value (most aggressive).
ON	OFF	Curve 2 -	This curve brings up the advance a little slower than curve 1 to prevent detonation on near stock motors.
OFF	ON	Curve 3 -	This curve is good for built motors that tend to detonate, advance comes in slower than curve 2 and to a lower final value.
ON	ON	Curve 4 -	This curve should only be used if your motor still detonates using curve 3, advance is brought in still slower and to a lesser final value than curve 3 (least aggressive).

Switch 4	Switch 5	Rev Limit	Application
OFF	OFF	6000 RPM	stock motor
ON	OFF	6500 RPM	modified street motor
OFF	ON	7000 RPM	race motor (most Harley valve trains
ON	ON	7500 RPM	race motor don't like to be revved this high)

DIAGNOSTIC LED FUNCTION

A diagnostic LED is located on the back of the DYNA 2000 ignition module. This LED is useful for verifying system functionality and static timing the motor.

VERIFYING SYSTEM FUNCTIONALITY WITH THE LED

The LED can be used to determine if the ignition module and pickup are working. When power is turned on to the ignition, the LED should flash on for 1/4 second then turn off. If the pickup is near a firing point, the LED will come on continuously. This "Flash period" indicates that the microprocessor is functioning in the DYNA 2000 ignition module.

When the ignition power is on and the engine is cranked over, the LED on the back of the DYNA 2000 will blink on and off. This indicates that the pickup is generating timing pulses and the DYNA 2000 is receiving them. The pickup is designed such that the LED will come on at about 45 degrees before top dead center and go off at top dead center for each cylinder. This corresponds to the leading edge of the window in the rotating cup (45 BTDC) and the trailing edge (TDC).

STATIC TIMING THE MOTOR WITH THE LED

IF THE MOTOR WAS TIMED PROPERLY BEFORE INSTALLING THE DYNA 2000, YOU SHOULDN'T HAVE TO RE-TIME IT. HOWEVER, IT SHOULD BE CHECKED BY OBSERVING THE TIMING MARKS AS DESCRIBED UNDER "TIMING CHECK".

Static timing is easy with the DYNA 2000. Remove the timing inspection plug above the primary drive housing on the left side of the motor. Remove the spark plugs to make it easy to turn the crankshaft. With the bike in high gear move the rear wheel to get the crankshaft to top dead center on the **compression** stroke of the front cylinder (TDC mark aligned in the inspection hole).

TIMING SET

Rotate the pickup base plate to cause the DYNA 2000 LED to turn off and on. Carefully follow this next instruction: find the point where the LED just turns off while rotating the base plate in a clockwise direction. Lock down the pickup base plate at this location. Verify that the crankshaft is still on top dead center. Your base timing should now be set perfectly.

The pickup plate should be very close to the factory setting (usually within a degree or two). If the plate has to be rotated an extreme amount or does not have enough adjustment to bring the timing in, the engine may be on its exhaust stroke. Remove the pickup plate and observe the timing rotor. The pickup should be sitting in one of the windows when it is in place. If the windows are far away, rotate the crankshaft 180 degrees and check again.

TIMING CHECK

For a double check on the timing, while still in gear rotate the rear tire so the engine is before top dead center on the front cylinder compression stroke, then slowly rotate the crankshaft forward to top dead center and observe the LED turn off as the TDC mark on the flywheel passes the inspection window.

Replace the spark plugs and timing inspection plug and start the engine.

DYNAMIC TIMING

The DYNA 2000 timing can be checked dynamically (with the engine running). This is normally not necessary, but if you want to check the timing in this manner, use the following procedure:

- Set the DIP switches to NORMAL VOES mode and curve #1. This will cause the ignition to go to 35 degrees advance at 1500 rpm and above.
- If you are not using the VOES switch, ground the purple wire to the frame or engine. This will cause the "quick" VOES curve to be active.
- Now use a timing light connected to the front cylinder plug wire to observe the flywheel timing marks through the inspection hole on the left side of the engine.
- When the engine rpm is above 1500 rpm, the full advance mark should come into view in the Inspection hole.
- This will verify that the ignition pickup is set properly. Now reset the DIP switches for the mode you want to run. Note! - when the switch settings are changed, the power to the module must be turned off and back on for the new settings to take effect.

RETARD MODE USING V.O.E.S WIRE

This mode is only for use with vehicles that require ignition retard under certain conditions, such as bikes equipped with nitrous oxide or a turbocharger. When mode switch 1 is in the ON position, The V.O.E.S. (purple) wire acts as a retard activation line. In this mode, the V.O.E.S. wire should not be connected to a V.O.E.S. switch. To use this function, the V.O.E.S. wire must be connected to a switch or relay that can ground this input at the desired time during vehicle operation.

In retard mode, when the V.O.E.S. wire is grounded, the ignition timing will be limited to 25 degrees final timing regardless which advance curve is selected. When the V.O.E.S. line is not grounded, the ignition timing will follow the "quick" version of the selected advance curve. See the advance curve drawing at the end of these instructions. The following chart indicates how much retard can be achieved:

Curve Selected	Final Timing For Curve	Final Timing with Retard Activated	Total Retard
1	35 degrees	25 degrees	10 degrees
2	35 degrees	25 degrees	10 degrees
3	32 degrees	25 degrees	7 degrees
4	30 degrees	25 degrees	5 degrees

TUNING TIPS - ADVANCED

Occasionally, best performance may fall somewhere between the advance curves programmed into the DYNA 2000. By rotating the pickup clockwise (advanced) or counter- clockwise (retarded), the entire curve will be shifted up or down. Be aware that if you advance the pickup, your final timing will be increased. Excessive advance may cause pinging and hard starting, so only turn the pickup one or two degrees at a time and note any changes to the motor.

For racing applications, the advance can be set to always come in quickly by using NORMAL VOES mode and permanently connecting the VOES wire to ground. These curves are similar to what is generated by a mechanical advancer.

For heavy bikes or built motors that tend to detonate, the advance can be brought in more slowly. If the VOES wire is left unconnected, the advance will always follow the slower rpm curve as shown on the following graph.

NORMAL VOES MODE ADVANCE CURVES

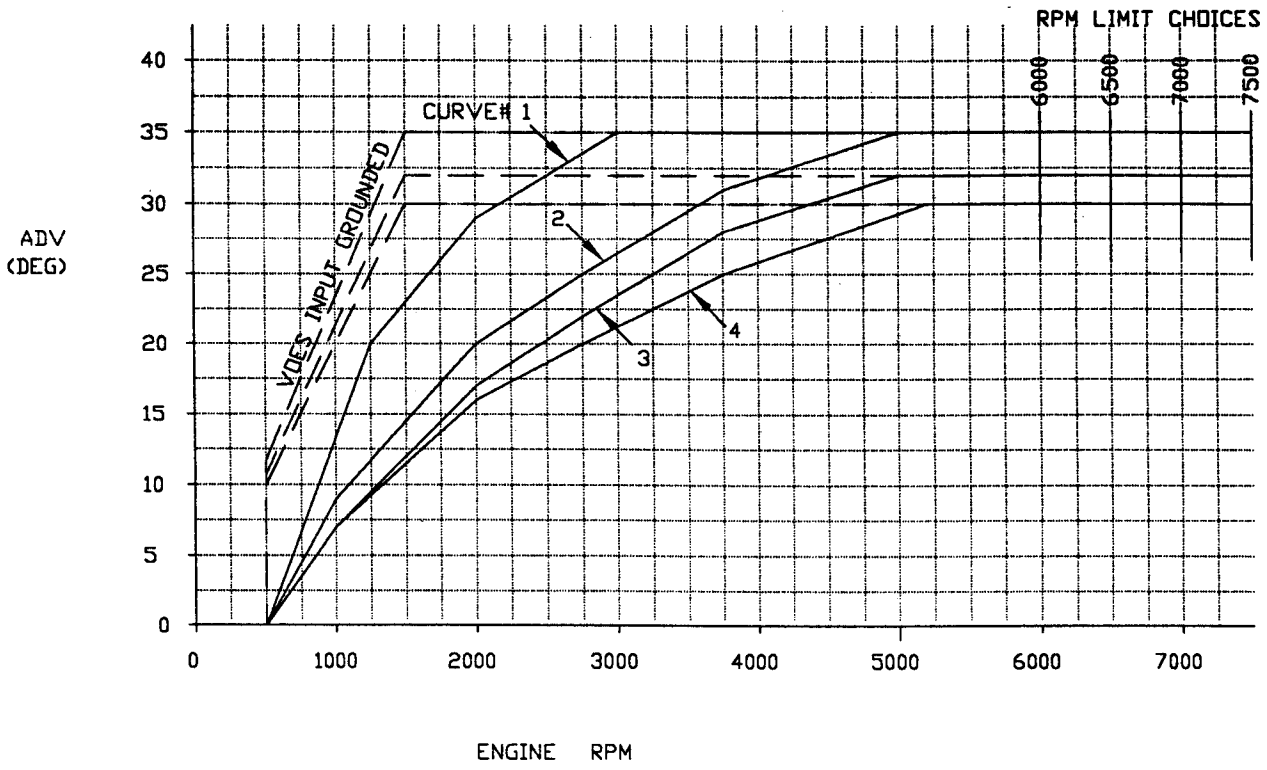

RETARD MODE ADVANCE CURVES

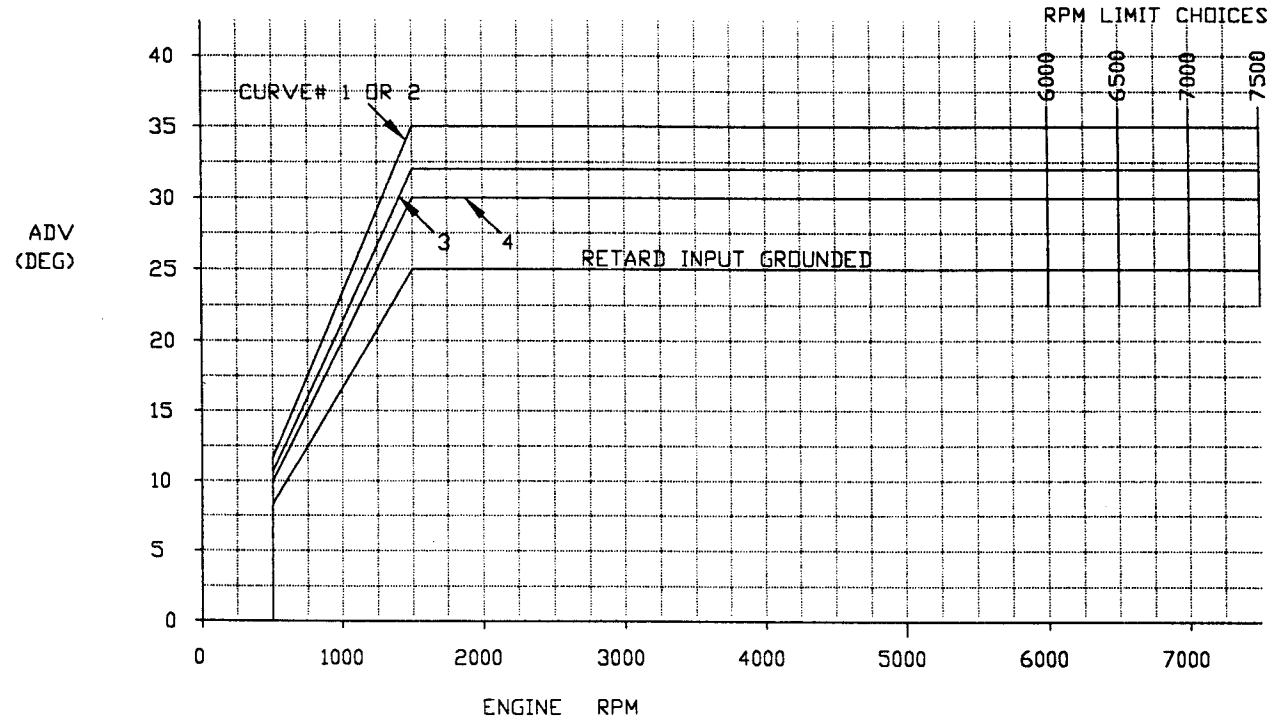

DD2000-HD2E ADVANCE CURVES

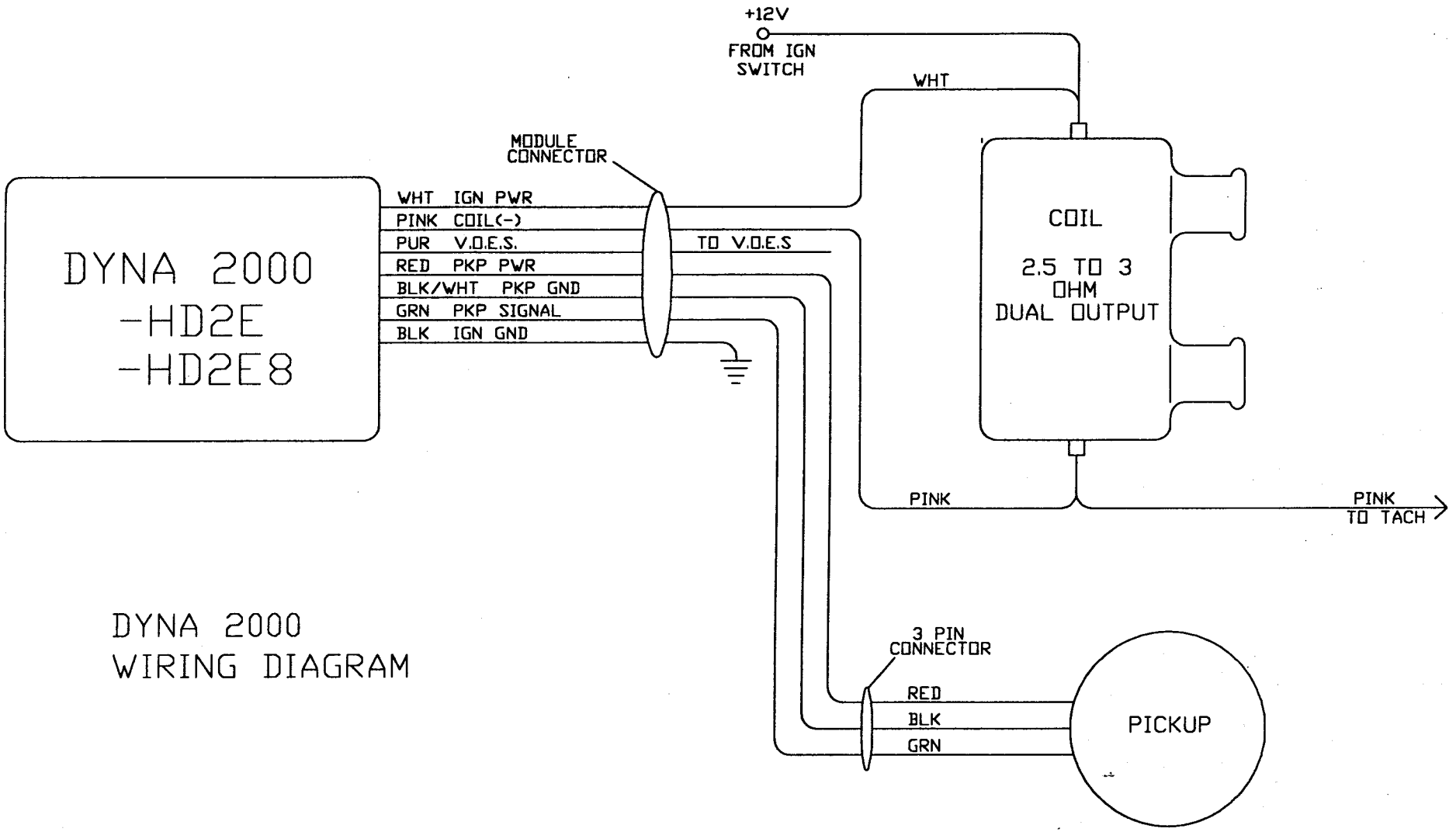

DYNA 2000
WIRING DIAGRAM

NOTE RECOMMENDED COIL: USE ONE DUAL OUTPUT COIL WITH 2.5 TO 3 OHMS PRIMARY RESISTANCE, SUCH AS DYNATEK PART NO. DC6-1 OR DYNATEK PART NO. DC1-1.