Installation manual for the H - Box

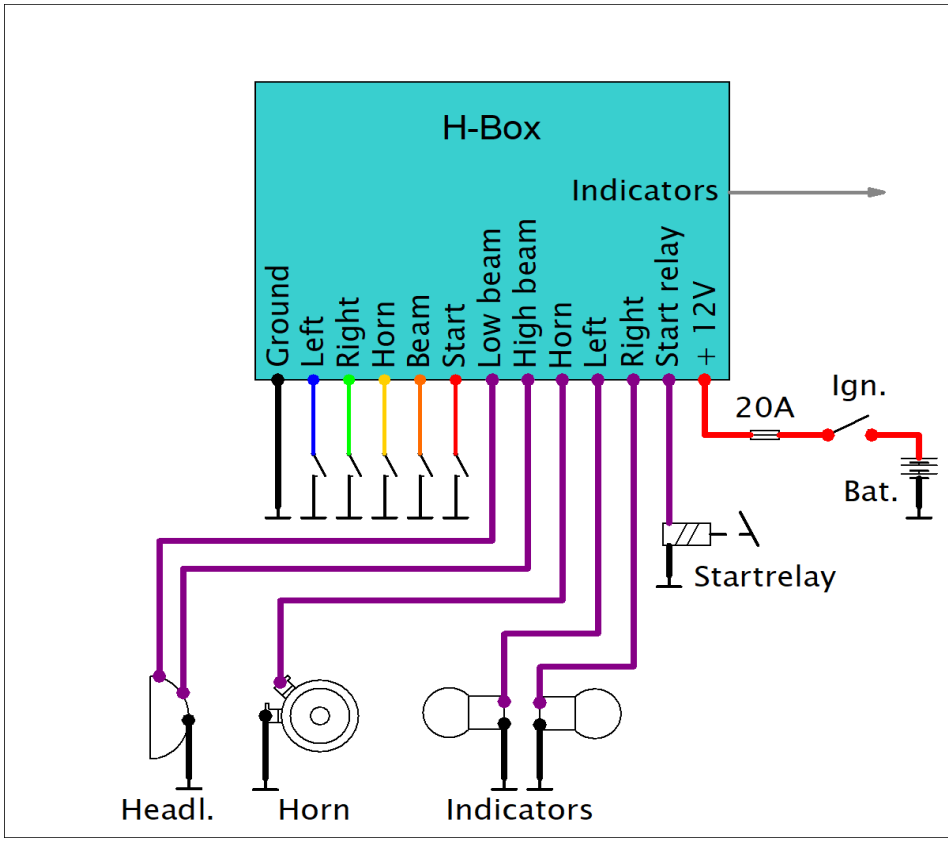

Push button or switch input for the turn signal on the left (Blue): A button or switch is connected here that switches the input to ground. When the contact is closed, the indicator starts. With the 2 button function, the left button is connected here.

Push button or Switch input for the turn signal on the right (Green): A button or switch is also connected here that switches the input to ground. The turn signal starts when the contact to ground is closed. For the 2 button function, the right button is connected here.
By the way, a hazard warning light function is activated by pressing the flashing buttons at the same time in button mode.

Push button input for the Horn (Yellow): This input is also "low active".

Push button or switch input for Light (Orange): The switch or button for the high beam is connected to this cable. The box switches the light when this pin is connected to ground. In button mode, if the button is pressed for longer than 2 seconds, the light turns off.

Button input start relay (Red thin cable): When switching to ground, 12V is switched for the start relay.

Ground (Black): There are 2 ground cables here because some steering bearings do not have an optimal ground connection. The thicker cable then goes to the frame and the thinner cable goes to the handlebars.

12V Input (Red thick cable): This is where the 12 V from the ignition switch is connected to the box. The individual outputs of the box are short-circuit-proof and self-resetting. We are still implementing a back-up fuse because in the event of a short circuit, temperatures of around 120 degrees can arise in the box, which may lead to cracks in the casting compound. Then the box would no longer be waterproof.

Turn signal outputs Left and Right: These are the 12V switching outputs for the turn signals. The flashing speed is independent of the indicators used. The **thin gray cable** goes to the indicator control in the speedometer.

Horn output: This is the 12V switching output for the horn. This output can be loaded with a maximum of 3 amps. **Be careful with old horns! They often draw more than 3 amps. This can destroy the internal output! Just feel free to invest about 9,- for a new horn if you are not sure about the current draw of teh old horn.**

Low Beam Output: This connection supplies the 12V voltage for the low beam. When starting, the light can be switched off to ensure there is enough power available for the starter (see page 2).

High Beam Output: This connection supplies the 12V for the high beam.

Start Relay Output: The relay for the starter is connected here. **Please do not connect the starter directly to the electronics box, but only via a relay!**

If your bike does not have a starter, you can use the inputs and outputs to the Start Relay for the brake light by setting menu item 4 in the table to the left. Then all other consumers remain on when the output switches.

Box Settings:
You can change the various functions of the H-Box at any time. Before turning on the ignition switch, press and hold the horn button until the power is on. After releasing the horn button, the box is in setting mode. If you don't have a horn button, you have to simulate it by bridging the yellow cable to ground. A single warning flash indicates that you can select the first option in the table. By pressing the left or right flashing button you can then make the settings as shown in the table. After pressing a turn signal button you enter the next program mode, which is then indicated by flashing twice. So you then “move” through all 8 (in the 2-button mode there are 6 options) menu items and make your personal settings. The following options are possible:

Number of Flashes	Mode	Left Flasher Button	Right Flasher Button	Description
1 x	2 Button-Function	2 Button	4-5 Buttons / Switches	The box can be controlled by 2 buttons or 4-5 Buttons / Switches button
2 x	Flasher Auto Off	Off	On	The Flasher is off after 40 times.
3 x	Low Light	On	Off	Indicators light UP with approx. 25% brightness, when they are not activated.
4 x	Start Relay or Brake Light	Brake Light	Start Relay	The start output can alternatively be used for the brake light.
5 x	Brake light Flasher	Active	Off	The Brake Light flashes 3 times quickly before turning on permanently.
6 x	The Light turns Off first when power ON	Light Off	Light On	The light is only activated after pressing the button or is ON immediately.
7 x	Light Button - or Switch	Light Switch	Light Button	The box can be used for light switches or buttons.
8 x	Flasher switch - or Button	Flasher Switch	Flasher Button	The box can be used for flashing switches or buttons.

The functions are permanently saved in the box after the 6th or 8th setting point, but can be changed again at any time.

In the 2-button mode, the corresponding indicator is activated by briefly tapping the button. Briefly tapping the respective button twice switches the headlight (left) or switches the ignition on or off (right). By holding the left button, the horn is switched on as long as the button is pressed. By holding the right button, the starter relay is activated if the start output is not used for the brake light.

Installation:
The box has an integrated 15 amp inline fuse. For more powerful consumers, additional relays must be installed for the corresponding consumers. The cables for controlling the fittings can be as thin as you like. Only a very small current flows here in the switching state. For example, CAT6 cables with shielding work very well here. The load cables, on the other hand, should have a cross section of at least 0.5 mm².

Please place the box and the control cables as far away as possible (>10cm) from the ignition cables. The ground connection to the frame should be as short as possible. The control cables should be connected to the ground connection over a short distance to avoid interference from the ignition system. Otherwise, the strangest errors can occur (turn signals go off every now and then, the light sometimes switches for no reason, etc.). The box is relatively insensitive to EMC interference thanks to several blocking measures and software protection, but precautions don't hurt. In any case, shielded plug connectors should be used. In any case, shielded cables are a good idea.

Please note that the manufacturer's liability for any damage or disadvantages suffered by the user due to improper use or installation of the electronics box is hereby expressly excluded. Please observe the relevant traffic regulations. The Joost company further declares that this electronic box device meets the applicable CE standards and ROHS regulations. If you have any further questions, please do not hesitate to contact us at **info@elektronikbox.de.**

We wish you a lot of fun with your new electronics box and always a safe journey!