HD SOFTAIL 2000 -> up

INSTRUCTIONS

The PAN-CRUISE “EVOLUTION” oleopneumatic shock absorbers are delivered fully inflated by the factory in Quint (France) and are ready to use without any further adjustment. They have been tuned for an average load and will accomodate from 70 kgs to 150 kgs without need for adjustment.
The factory set-up also aims at maximum comfort.

The P1 pressure (P1 is the main spring pressure supporting the weight of the bike and the load) has been set at 27 bars (390 psi). The air valve is situated at the rear of the unit, on the main body of the damper.
The P2 pressure (P2 is the ride height adjuster pressure) has been set at 10 bars (145 psi) giving the bike the same ride height set by the HD factory. The air valve is situated at the fron of the unit, on the rotary part on the shaft.

NOTE : Adjusting the ride height can only lower the ride height.
CAUTION : Do not check or alter the pressures in P1 & P2, when first fitting the PAN-CRUISE “EVOLUTION” on your H.D. SOFTAIL TWIN CAM.

Running in :

Every seals used in the FOURNALES PAN- CRUISE “EVOLUTION” meet stringent aeronautic standards and are designed to resist very hight pressures in excess of 200 bars (2.900 psi).
Being very hard wearing, it will take around 1.500/2.500 kms for them to be in properly before giving a more beautiful compliant and comfortable ride.
There is no need to check either P1 or P2, even after 30/50.000 kms.

IMPORTANT : Before adjusting either P1 or P2, ensure that your bike is on a flat level and hard surface supported so as to allow the rear wheel to be completly free from the ground. The point of support must not interfere with the free movement and access to both the swing arm and the oleopneumatic suspension units. Best is to use a center stand that lift the bike under the frame loop under the engine.

Adjustments :

The 4 hight pressure aeronautical standards air valves can be inflated as mush as needed using a pump or a nitrogen from a bottle. Connection must be done either with a quick fitting or screw on, coupling.
Please note : what ever device (s) you choose to adjust the PAN-CRUISE”EVOLUTION” it must be able to deliver a minimum of 30 bars (450 psi) for normal adjust. Please check before using any device.

1/ How to modify the bike ride height, acting solely on P2 pressure (do not touch P1 pressure).

* The lower the pressure (minimum 8 bars / 116 psi), the higher the bike.
* The higher the pressure (maximum 30 bars / 440 psi), the lower the bike.

Rear valve P1	Front valve P2	below standard height without rider	below standard height with a 75 kgs rider
27 bars/392 psi	10 bars/145 psi	0/0 inch	- 21 mm/0,83 inch
27 bars/392 psi	13 bars /189 psi	- 3 mm/0,12 inch	- 26 mm/1,03 inch
27 bars/392 psi	18 bars/261 psi	- 19 mm/0,75 inch	- 32 mm/1,30 inch
27 bars/392 psi	23 bars/334 psi	- 27 mm/1,07 inch	- 40 mm/1,58 inch
27 bars/392 psi	28 bars/406 psi	- 40 mm/1,58 inch	- 61 mm/2,40 inch

IMPORTANT : Lower the ride height will reduce the rear wheel clearance against the fender/mudgard. The exhaust pipes also get near the ground and can get scraped in bends, road holding is modified and comfort is lessened.

2/ How to modify adjustment of the main spring stiffness : by deflating P2, you alter P1 pressure. But this is only justified when riding your bike with special load (either heavy or very light).

* The higher P1 pressure, to obtain a hard main spring load is 37 bars (537 Psi) maximum.
* The lower P1 pressure, to obtain a soft hard main spring load is 23 bars (333 Psi) minimum.

Adjust P1 pressure in each shock absorber after deflating P2.
ALWAYS REFIT THE SCREW CUP ON EACH AIR VALVE.

FOURNALES SUSPENSION SA 23, ZA Ribaute 31130 Quint France
Phone. : 00.33.561.247.524 Fax : 00.33.561.247.525 Web : www.fournales.fr Mail : infos@fournales.fr

« PAN CRUISE EVOLUTION » OLEOPNEUMATIQUE SUSPENSION
Harley Davidson Softail, from 2000 model onward
NOTICE OF INSTRUCTIONS

Introduction :

On the "Softail" model, the oleopneumatic shock absorbers work in extension. They are in permanent stretching under high loads. They self align along the axle binding the front and rear supports.
In order to enable their self alignment these ones must be completely free in lateral translation on their front fixing axles. Correctly-sized O-rings maintain the shock absorbers adjusted on their mounting bolts and allow a possibility of self alignment required for their good functioning..

ASSEMBLY

- Remove the original shock absorbers.
- In order this operation to be easily and safely performed, the motor bike must be steady under its frame so that the rear wheel does not touch the ground (wheel hanging).
- Release and unscrew the front nuts and rear bolts and lift the wheel at the last bit of tread.
- Install the Pan-Cruise in the right side, with the rear valve towards the ground.
- Use the original shouldered axles without any spacer or washer. This means the original 27/17/1.5mm washer must be removed from the hexagonal head.
- On the rear bolt, transversal clearance of the rear yoke is 2mm. Insert the two O-rings (OR16x3.5) on both sides of the yoke. Do not insert any washer.
- Grease the cylindrical spans of the bolts and screw them until the locking on their shoulders. The threads can receive removable lock thread (blue).
- Grease the silent-blocs and their cups and fix the rod to the swing arm as originally (sketch herein).
- Tighten the locknut by holding the rod with a 7mm spanner.

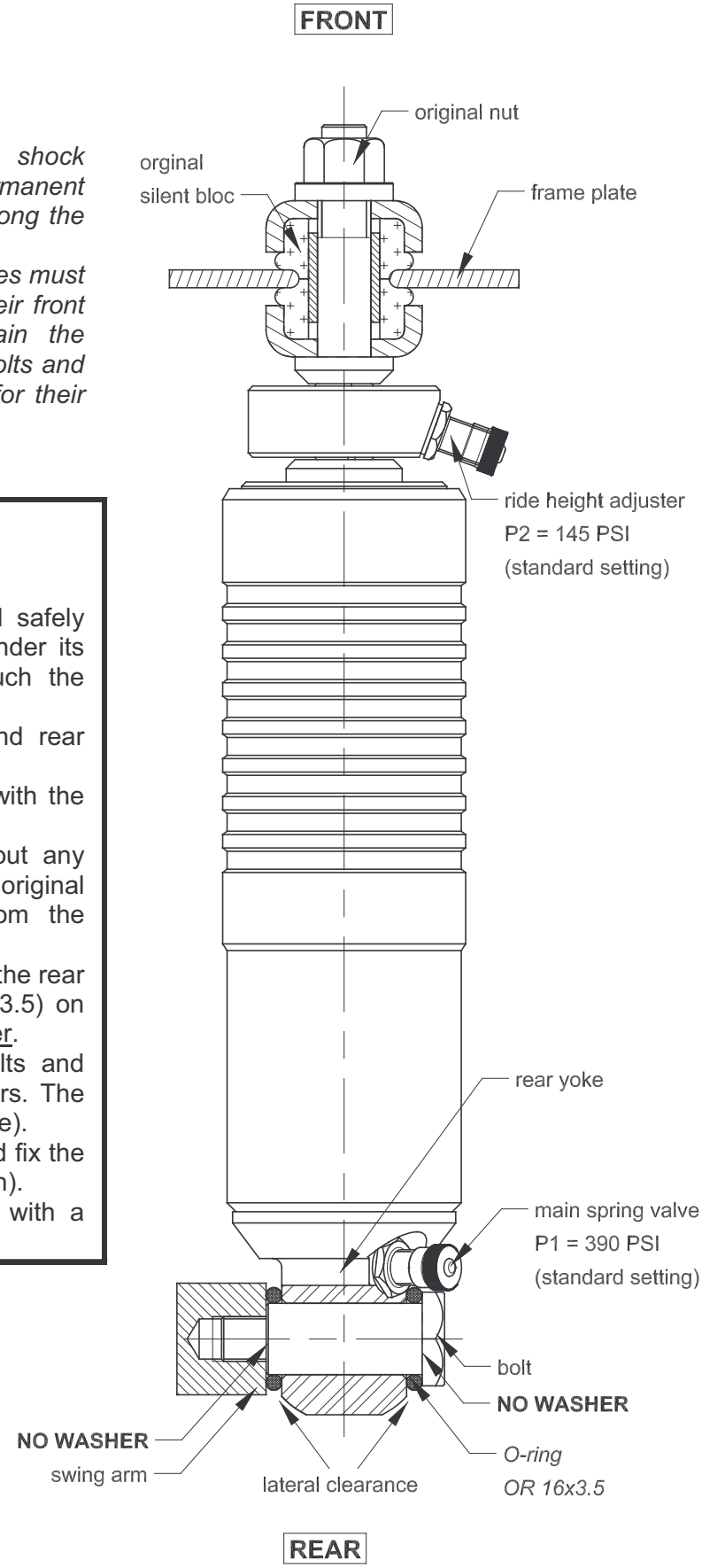

FOURNALES® SUSPENSION

23, Z.A. Ribaute
31130 Quint-Fonsegrives France
Tél : +33 (0) 561 247 524 Fax : +33 (0) 561 247 525
Web : www.fournales.fr E-Mail : infos@fournales.fr